Meri Glass Lantern with Solar Candle
LC003938

Project Name: _____

- Lantern features a solar-powered flameless candle, glass hurricane, and a contemporary black iron frame
- 1 AA 1.2V 300mAh rechargeable battery included
- Suited to weather the elements - the iron frame is powder-coated and the base contains drainage holes
- Contains an on | off switch to conserve the battery when not in use
- On the color temperature scale, this item reads at 2200K. It is a soft, warm white - perfect for spaces meant to be cozy and inviting

Amount of LEDs/Sockets per Item
1 per Light

LED Temperature
2200k

Material
Black Metal and Glass

Product Dimensions
8" Dia x 10.5" H
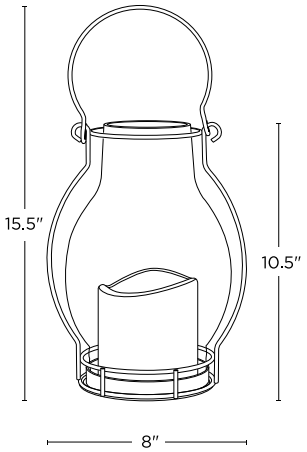
Switch Options
On/Off